■PRODUCT DRAWING

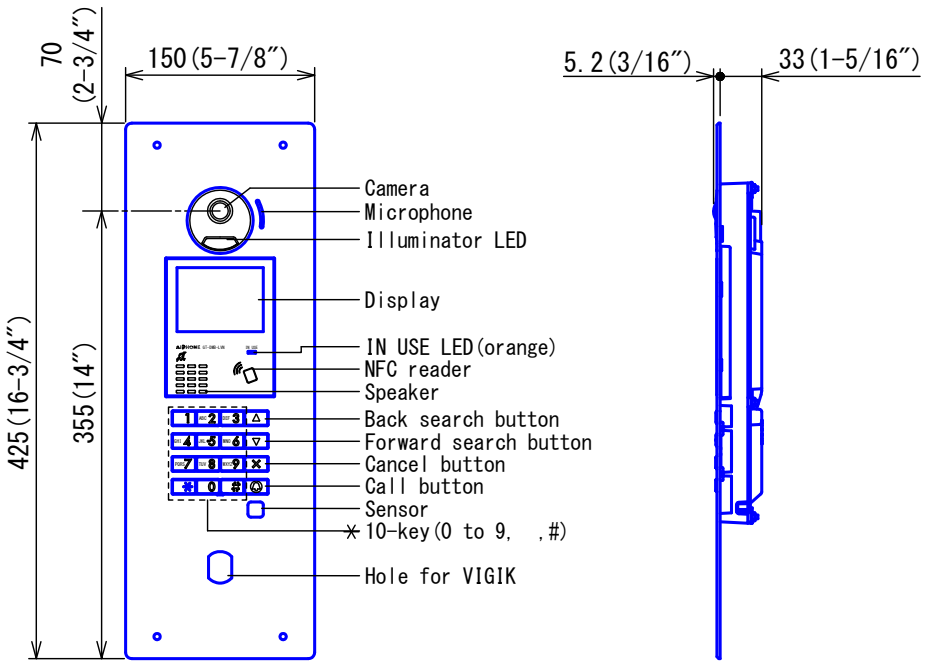

●MOUNTING(using GT-4B)

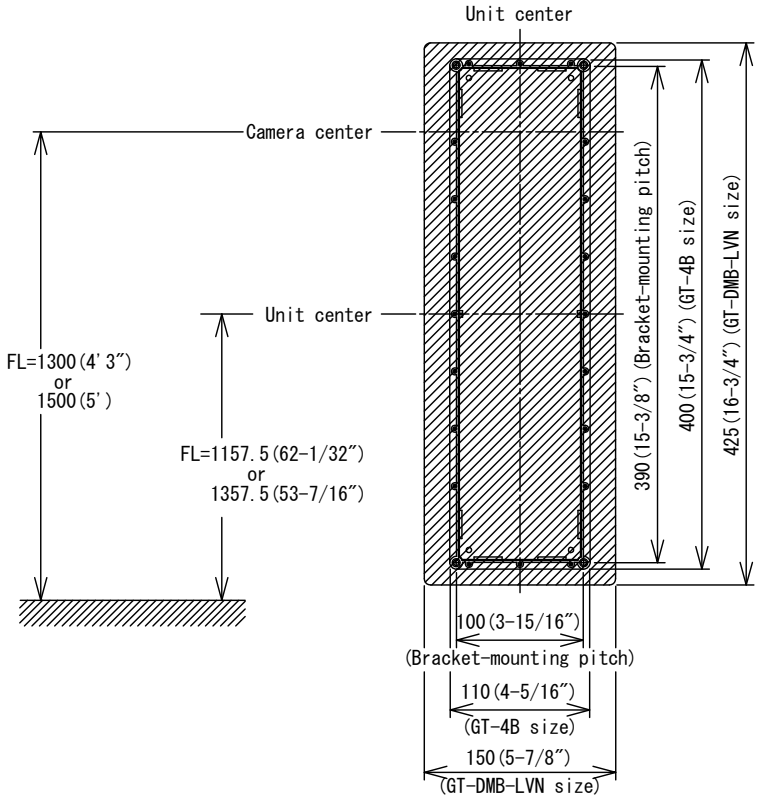

DESCRIPTION	FIG. NAME		UNIT	DATE
ENTRANCE STATION	PRODUCT DRAWING		mm	8 June, 2017
MODEL NO.	FIG. NO.	PAGE	REVISION	AIPHONE
GT-DMB-LVN	G55627-1-6	1/6	1	

10256E

■WIRING DIAGRAM

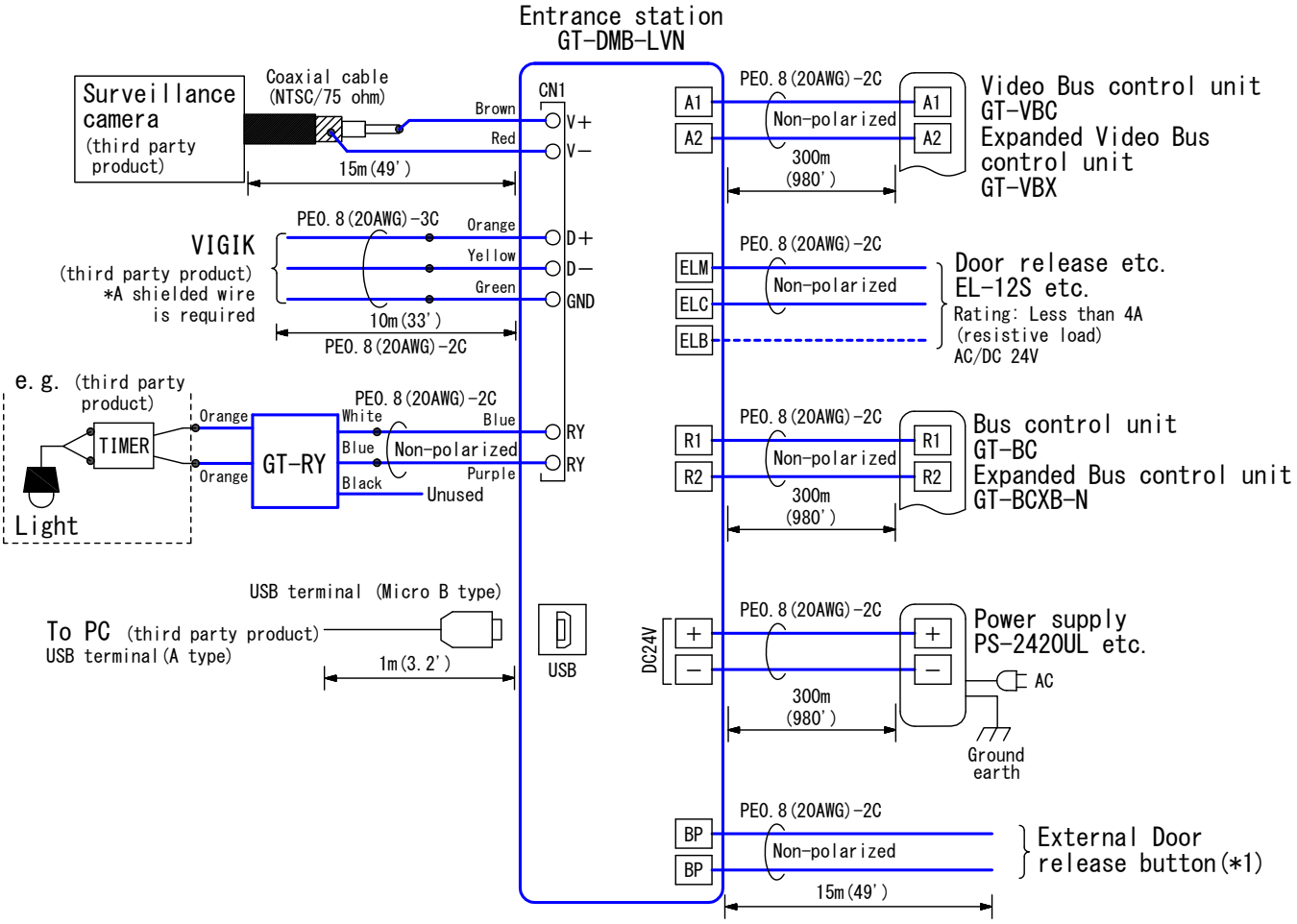

PE: Polyethylene-insulated PVC jacket cable

*1. Input specifications

Input method	N/O(Normally Open) contact
Detection confirmation time	100ms or more
Closed contact resistance	1kΩ or less
Open contact resistance	50kΩ or more
Terminal short current	10mA or less
Open circuit voltage between terminals	3.3V DC or less

DESCRIPTION	FIG. NAME		UNIT	DATE
ENTRANCE STATION	WIRING DIAGRAM		mm	8 June, 2017
MODEL NO.	FIG. NO.	PAGE	REVISION	
GT-DMB-LVN	G55627-2-6	2/6	1	AIPHONE

10256E

■IMAGE VIEW AREA & MOUNTING HEIGHT

●WIDE ●ZOOM

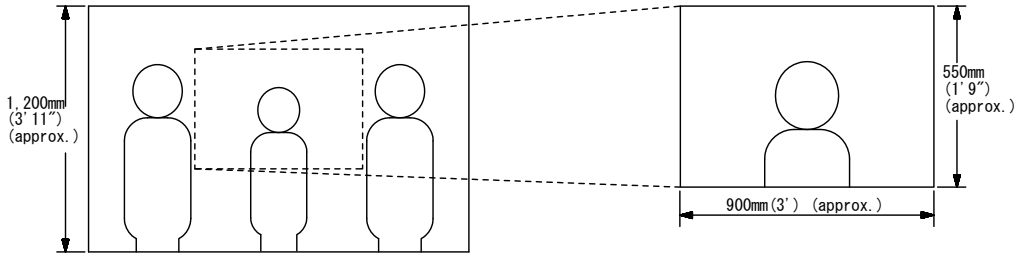

- Objects appear smaller due to greater distortion in the surrounding sections compared to the central section, but a wider area is displayed.
- Image view area depends on the camera zoom position.

●WIDE

Vertical

Mounting position 1,300mm(4'3") Mounting position 1,500mm(5')

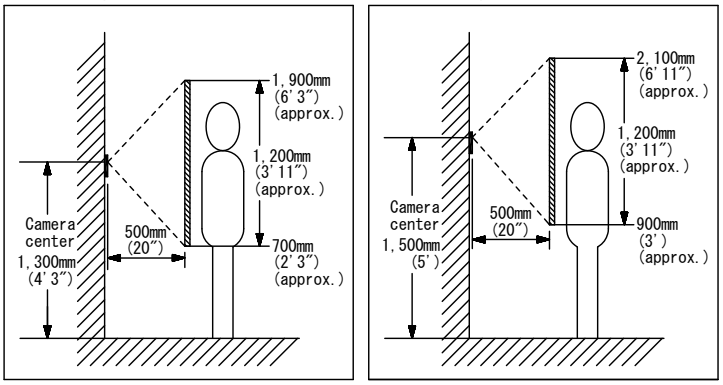

Horizontal

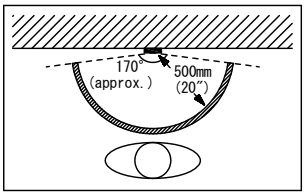

◆ An area over a range of approx. 170° in a 500mm(20") radius from the camera is displayed.(The display range is a rough estimation and may change due to the installation environment.)

●ZOOM (Mounting position 1,500mm(5'))

Vertical

Zoom <Up> Zoom <Center> Zoom <Down>

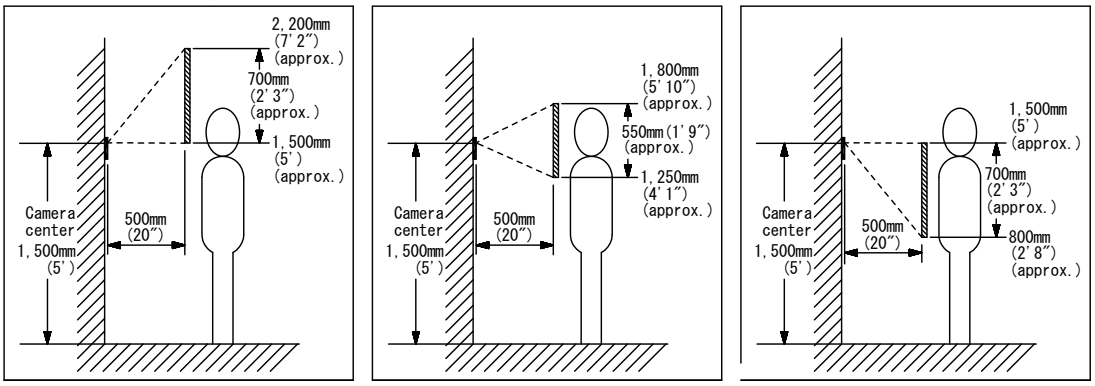

Horizontal

Zoom <Left> Zoom <Center> Zoom <Right>

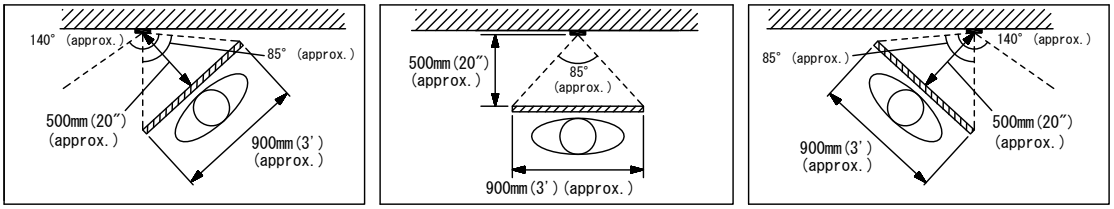

DESCRIPTION	FIG. NAME		UNIT	DATE
ENTRANCE STATION	IMAGE VIEW AREA		mm	8 June, 2017
MODEL NO.	FIG. NO.	PAGE	REVISION	AIPHONE
GT-DMB-LVN	G55627-3-6	3/6	1	

10256E

■RESTRICTIONS

- When use in Main section, the ID1 of Entrance station cannot be used.
- For power supply, use Aiphone power supply model or model specified for use with system.
- Run audio, video and power wire in each separate cable.
- Install vertically.
- Survaillance camera connection is only NTSC signal.
- Avoid to installations in the following locations;

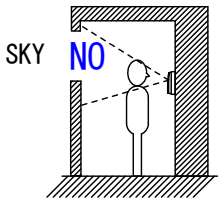

Locations where sky is the background(upper floors of Condominiums, etc.)

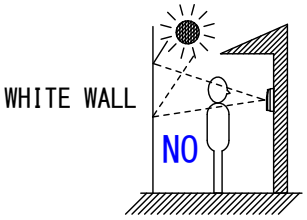

The background of the visitor is a white wall.

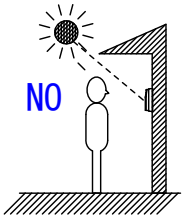

Where the location is strongly sunlit.

- Wires should be separate from each others.
  (Entangling of wires may cause degradation of image quality.)

■RESTRICTIONS ON WIRING

- For wiring, it is recommended to use a single PVC jacketed cable with PE(polyethylene) insulation.
  The following cables cannot be used;
  - Individual conductors
  - Coaxial cable
  - Twisted pair cable
  - Cable with conductors in odd number

- Keep the intercom wires more than 30cm (12") away from AC power lines, as they may cause noise or other malfunctions. When using an existing cable run, the system may not work properly due to the type of the existing cables. In that case, it will be necessary to install new cables.
- Unused connector lead wire should be cut and insulated.

■FUNCTIONS

- Calling/communicating with video image with Residential/tenant station or Guard station.
- Audio and pictograph guidance available.
- Activating door release from a Residential/tenant station or Guard station.
- Setting or releasing linkage with a Residential/tenant stations and Guard stations.
- Setting data transfer available to Guard stations and the other entrance stations.
- Name search
- Monitor-sensor-activated auto ON function for display.
- Call operation screen, Greeting message, Picture or Quick list is available to the standby screen.
- VIGIK supports.

■SETTING

- PROGRAM MODE

Item			Setting value/choices	Default
SELECT LANGUAGE			ENGLISH/FRANCAIS/NEDERLANDS/ESPAÑOL/DEUTSCH/NORSK/ITALIANO/TÜRK/SUOMI	ENGLISH
CHANGE PASSCODE	ADMIN PASSCODE (*3)	NUMBER INPUT	"*"+4DIGITS	*1111
		NFC CARD	-	-
	MANAGER PASSCODE	NUMBER INPUT	"#"+4DIGITS	#2222
		NFC CARD	-	-
PROGRAMMING (*3)	PROGRAMMING (*2)		-	-
		CAMERA PRESET	1-9	5
	TRANSFER DATA	ENTRANCE	1-16	-
		GUARD STATION	1-4	-
	VERIFY PROGRAM (*2)		-	-
SYSTEM SETTINGS	CALLING METHOD (*3)		NAME/#SEARCH, SECT LIST+UNIT# (*1), UNIT NUMBER, SECT#+UNIT# (*1)	NAME/#SEARCH
	SECTION INFO (*3)	SECTION #	1-4 alphanumeric characters	-
		SECTION NAME	0-32 alphanumeric characters	-
	RESIDENT INFO	UNIT # (*3)	1-6 alphanumeric characters	-
		ENTRANCE	0-32 alphanumeric characters	-
	GUARD INFO (*3)	GUARD #	1-6 alphanumeric characters	-
		GUARD NAME	0-32 alphanumeric characters	-
STATION SETTINGS	ACCESS CODE	NUMBER INPUT	4-6 DIGITS	-
		NFC CARD	-	-
	TIMER SETTINGS	OPERATION TIMER (*3)	15-99SEC.	15 SEC.
		PROGRAM TIMER (*3)	30-99SEC.	60 SEC.
		CALL DURATION	30-99SEC.	45 SEC.
		UNLOCK TIMER	00-20SEC.	00 SEC.
	GUIDANCE LANGUAGE		NO GUIDANCE/ENGLISH/FRANCAIS/NEDERLANDS/ESPAÑOL/DEUTSCH/NORSK/TONE	NO GUIDANCE
	SCREEN SETTINGS	SCREEN THEME	A/B	A
		SCROLL SPEED	0-9	5
		BRIGHTNESS	0-9	5
	SORT SETTINGS	DISPLAY UNIT #	OFF/ON	ON
		SORT SETTING	SORT BY NAME/SORT BY UNIT#	SORT BY NAME
	STANDBY SCREEN	GREETING	160 characters	-
		OPERATION	-	-
		PICTURE	-	AIPHONE
		QUICK LIST	1-4	-
	MONITOR SETTING		OFF/ON	OFF
	NIGHT LIGHTING		AUTO LIGHTING/ALWAYS OFF	AUTO LIGHTING
	CAMERA SETTINGS	CAMERA DISPLAY	ZOOM/WIDE/ZOOM 3S>>WIDE/WIDE 3S>>ZOOM	ZOOM
		LIGHT OR CCTV (*3)	LIGHT CONTROL/CCTV SWITCH	LIGHT CONTROL
		CAMERA PRIORITY (*3)	INTERNAL CAMERA/EXTERNAL CAMERA	INTERNAL CAMERA
		CAMERA PRESET	1-9	5
		VISIBILITY	OFF/ON	OFF
OTHER SETTINGS	RS485 SETTING (*3)		AIPHONE/HEXACT®	AIPHONE
	GUIDANCE VOLUME (*3)		1-3	2
QUIT			-	-

*1. For main entrance stations only.
*2. For tenant entrance stations only.
*3. The items cannot be set with the Manager authority.

Setting switch

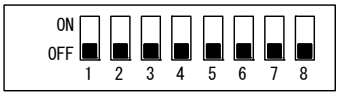

■SETTING

- Sets this entrance station as used for either a multi building system or single building system.(Multi building system/Single building system)····· SW1-1
- Sets the ID of this entrance station.(ID 1-16)
  ＊ (9)-(16): GT-BCXB-N Common trunk line 2 ····· SW1-2 to 4
- Sets the event that triggers the LCD
  (Sensor detection/Operation of this unit) ····· SW1-7
- Resets the Admin Passcode and Manager Passcode when this unit is initialized by setting this switch to ON for 2 seconds. ····· SW1-8
- Unused····· SW1-5, 6

■SPECIFICATIONS

Power source	DC 24V. Supplied from a power supply unit (PS-2420 etc.)
Type of communication	Open voice communication (Voice-actuated)
Ambient temperature	-10～+60℃ (+14 ～+140° F)
Monitor	3.5 inch TFT color LCD
Pixels	230,000 pixels (approx.), QVGA (320×240)
Mounting	Flush wall-mount
Material	Panel: Stainless steel Case: Self-extinguishing ABS resin
Unit color	Panel: Stainless steel with hairline finishing Case: Black
Weight	1,500g (approx.) (3.3 lbs)
Electrical box	GT-4B (not included)
IP rating	IP54
IK rating	IK07
Remarks	NFC receiver is equipped (Card type A, F) VIGIK available

DESCRIPTION	FIG. NAME		UNIT	DATE
ENTRANCE STATION	SETTING/SPECIFICATIONS		mm	8 June, 2017
MODEL NO.	FIG.NO.	PAGE	REVISION	AIPHONE
GT-DMB-LVN	G55627-6-6	6/6	1	

10256E